Services Guide

Welding

**NOTE 1: This information is pulled from credible sources. This information is a guide. Any information used from this guide must be re-contextualized (no copying and pasting). Re-contextualize information incorporating SEO and business specifics.*

**NOTE 2: For MCP websites, stick to general information and avoid specifics.*

YellowPages™

Table of Contents

Contents

1. WELDING OVERVIEW

1.1 GENERAL INFORMATION

http://www.gowelding.org/
https://en.wikipedia.org/wiki/Welding

- Welding is nothing more than the process of joining metals together.
- Welding today is comprised of three main ingredients which are required to join metals together:
  - An electrical power source to produce an arc.
  - Some form of shielding to protect the weld from the air.
  - Filler material to fill the weld joint.
- The process joins materials by causing fusion, which is distinct from lower temperature metal-joining techniques such as brazing and soldering, which do not melt the base metal.
- Many different energy sources can be used for welding, including a gas flame, an electric arc, a laser, an electron beam, friction, and ultrasound.
- While often an industrial process, welding may be performed in many different environments, including in open air, under water, and in outer space.
- Welding is a hazardous undertaking and personal protective equipment is required to avoid burns, electric shock, vision damage, inhalation of poisonous gases and fumes, and exposure to intense ultraviolet radiation.

1.2 SEO

Keywords (First Row – BEST, Last Row – LEAST)			
○ Welder	○ MIG Welder	○ TIG Welding	○ CWB
○ Underwater welding	○ Metal fabrication	○ Arc welder	○ Braze welding
○ Robotic welding	○ Stick welding	○ Plasma cutter	○ Cutting torch
○ Miller	○ Lincoln	○ ESAB	○ Flux-core

1.3 TYPES OF WELDING SERVICE

https://en.wikipedia.org/wiki/Shielded_metal_arc_welding
https://en.wikipedia.org/wiki/Flux-cored_arc_welding

Services Guide: Welding

https://en.wikipedia.org/wiki/Gas_metal_arc_welding
https://en.wikipedia.org/wiki/Submerged_arc_welding
https://en.wikipedia.org/wiki/Electroslag_welding
https://en.wikipedia.org/wiki/Oxy-fuel_welding_and_cutting
http://www.twi-global.com/capabilities/joining-technologies/arc-processes-fabrication-and-welding-engineering/arc-gouging/
http://torchmate.com/white-papers/How-a-plasma-cutter-works
http://www.pro-fusiononline.com/welding/plasma.htm

Types of Welding Service:

Type	Description
Shielded Metal Arc Welding (Arc/Stick)	○ A manual arc welding process that uses a consumable electrode covered with a flux to lay the weld. ○ Commonly known as stick or arc welding. ○ An electric current, in the form of either AC or DC from a power supply, is used to form an electric arc between the electrode and the metals to be joined. The workpiece and electrode both melt forming the weld pool that cools to form a joint. ○ As the weld is laid, the flux coating of the electrode disintegrates, giving off vapors that serve as a shielding gas and providing a layer of slag, both of which protect the weld area from atmospheric contamination. ○ Used extensively in the construction of heavy steel structures and industrial fabrication. ○ Commonly for welding of iron and steels (including stainless steel) but aluminum, nickel and copper alloys can also be welded with this method (uncommonly).
Gas Tungsten Arc Welding (TIG)	○ An arc welding process that uses a non-consumable tungsten electrode to produce the arc. ○ The weld area is protected from atmospheric contamination by an inert shielding gas (argon or helium), and a filler metal is normally used, though some welds, known as autogenous welds, do not require it. ○ Commonly used to weld thin sections of stainless steel and non-ferrous metals such as aluminum, magnesium, and copper alloys (sheet metal, tubing, etc). ○ Grants greater control over the weld than competing processes allowing for stronger, higher quality welds.

	○ Significantly slower than most other welding techniques.
Gas Metal Arc Welding (MIG)	○ A welding process in which the arc forms between a consumable wire electrode and the workpiece, which heats the workpiece and creates the joint as the wire feeds into the heated zone. ○ Along with the wire electrode, a shielding gas feeds through the welding gun, which protects the process from contaminants in the air. ○ A constant voltage, DC power source is most commonly used with a separate or integrated wire feeder. ○ Originally developed for welding aluminum and other non-ferrous materials, was soon applied to steels because it provided faster welding time compared to other welding processes. ○ Shielding gasses commonly used are argon and helium (for non-ferrous materials), and an Argon/CO_2 mixture, either 75/25 & 90/10 (for steels).
Flux-cored Arc Welding (MIG)	○ Uses the same process as MIG welding but without the need for a shielding gas because use of tubular, flux-cored wire electrode. ○ Often, the flux is relied upon to generate the necessary protection from the atmosphere, producing both gaseous protection and liquid slag protecting the weld. ○ Dual shield refers to the process of flux-core welding that also uses an externally supplied shielding gas and is primarily designed for welding structural steels.
Submerged Arc Welding	○ An automated welding type that requires a continuously fed consumable solid or tubular (metal cored) electrode and an arc submerged beneath a bed of granular flux. ○ The molten weld and the arc zone are protected from atmospheric contamination by being "submerged" under a blanket of granular fusible flux consisting of lime, silica, manganese oxide, calcium fluoride, and other compounds. ○ Normally limited to the flat or horizontal-fillet welding positions. ○ Deep weld penetration but limited to ferrous (steel or stainless steels) and some nickel-based alloys.
Electroslag Welding	○ A highly productive, single pass welding process for thick (greater than 25 mm up to about 300 mm) materials in a

	vertical or close to vertical position. ○ Used to join carbon steel plates and/or sections that are very thick. It can also be used on structural steel if certain precautions are observed. ○ Benefits include high metal deposition rates—it can lay metal at a rate between 15 and 20 kg per hour per electrode—and its ability to weld thick materials.
Oxy-fuel Cutting or Welding	○ Oxy-fuel welding and cutting are processes that use fuel gases and oxygen to weld and cut metals. ○ In oxy-fuel welding, a welding torch is used to weld metals. Welding metal results when two pieces are heated to a temperature that produces a shared pool of molten metal. The molten pool is generally supplied with additional metal called filler. Filler material depends upon the metals to be welded. ○ In oxy-fuel cutting, a torch is used to heat metal to its kindling temperature. A stream of oxygen is then trained on the metal, burning it into a metal oxide that flows out of the kerf as slag. ○ Fuel types include acetylene (most common) as well as gasoline, hydrogen, MPS & MAPP gas, butane, and propane.
Plasma Cutting/Welding	○ A process that cuts through electrically conductive materials by means of an accelerated jet of hot plasma. ○ Involves creating an electrical channel of superheated, electrically ionized gas i.e. plasma from the plasma cutter itself, through the work piece to be cut. ○ Accomplished by a compressed gas (oxygen, air, inert and others depending on material being cut) blown through a focused nozzle at high speed toward the work piece. ○ Plasma welding a process similar to TIG welding. ○ The key difference is that by positioning the electrode within the body of the torch, the plasma arc can be separated from the shielding gas envelope.
Gouging	○ An electric arc is generated between the tip of a carbon electrode and the workpiece. The metal becomes molten and high velocity air streams down the electrode to blow it away, thus leaving a clean groove. ○ Typical applications include back gouging, removal of surface and internal defects, removal of excess weld metal,

	and preparation of bevel edges for welding. ○ Can be applied to a wide range of metals. DC is normally preferred for steel and stainless steel but AC is more effective for cast iron, copper and nickel alloys.
Soldering	○ A process in which two or more items are joined together by melting and putting filler metal into the joint, the filler metal having a lower melting point than the adjoining metal. ○ Soldering differs from welding in that soldering does not involve melting the work pieces.

1.4 LOCATIONS OF WELDING SERVICE

http://www.indsci.com/docs/Press/ISHN_Weld_TightSpace_0404.pdf
https://en.wikipedia.org/wiki/Hyperbaric_welding

Welding Locations:

Type	Description
In-shop	○ Focused on welding in a contained shop environment with easy access to materials, equipment, consumables and labour.
Open air	○ For construction applications and jobsites that are not located inside a shop where resources may not be readily available including high rises, bridges, outdoor repairs, etc.
Confined space	○ Welders working in confined spaces must be trained in and implement federal and provincial confined space safety procedures as well as have all required personal protective equipment (PPE) to ensure work is completed safely without injury to the worker or bystanders.
Hyperbaric	○ The process of welding at elevated pressures, normally underwater. Hyperbaric welding can either take place *wet* in the water itself or *dry* inside a specially constructed positive pressure enclosure. It is predominantly referred to as hyperbaric welding when used in a dry environment, and underwater welding when in a wet environment.
Mobile	○ The welder is a self-contained mobile unit with all equipment, materials, power, and consumables to

	complete a job on site, sometimes in remote locations.

1.5 WELDING MATERIAL TYPES

http://pubs.aws.org/welding-handbooks/490
http://www.broadwayweldingshop.com/

Material Types			
○ Cast iron	○ Tool & die steel	○ Magnesium/magnesium alloys	○ Lead
○ Carbon steel	○ Stainless steel	○ Copper/copper alloys	○ Zinc
○ Alloy/structural steel	○ Aluminum/aluminum alloys	○ Nickel alloys	○ Titanium/titanium alloys
○ Plastics	○ Composites	○ Cobalt alloys	○ Dissimilar materials

2. SHIELDED METAL ARC WELDING (ARC/STICK)

https://en.wikipedia.org/wiki/Shielded_metal_arc_welding

General:

- Known informally as arc or stick welding, this is a manual arc welding process that uses a consumable electrode covered with a flux to lay the weld.
- An electric current, in the form of either alternating current or direct current from a welding power supply, is used to form an electric arc between the electrode and the metals to be joined.
- One of the world's most popular welding processes, accounting for over half of all welding in some countries. Because of its versatility and simplicity, it is particularly dominant in the maintenance and repair industry, and is heavily used in the construction of steel structures and for industrial fabrication.
- Process:
    - To strike the electric arc, the electrode is brought into contact with the workpiece by a very light touch with the electrode to the base metal then is pulled back slightly.
    - The tip of the electrode needs to be at a lower angle to the workpiece, which allows the weld pool to flow out of the arc.

- As the electrode melts, the flux covering disintegrates, giving off shielding gases that protect the weld area from oxygen and other atmospheric gases.
- Once part of the weld pool, the slag floats to the surface and protects the weld from contamination as it solidifies. Once hardened, it must be chipped away to reveal the finished weld.
- As welding progresses and the electrode melts, the welder must periodically stop welding to remove the remaining electrode stub and insert a new electrode into the electrode holder.

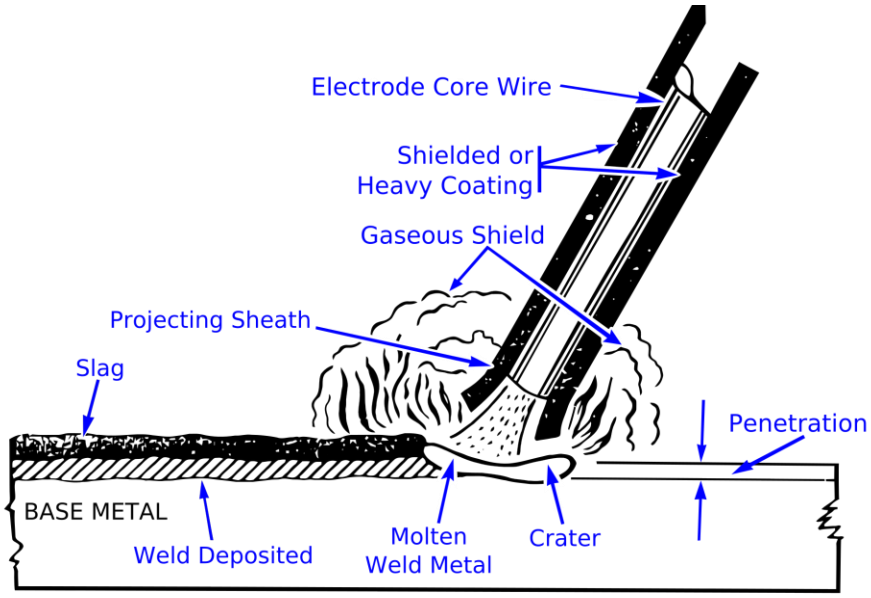

SMAW WELD DETAIL

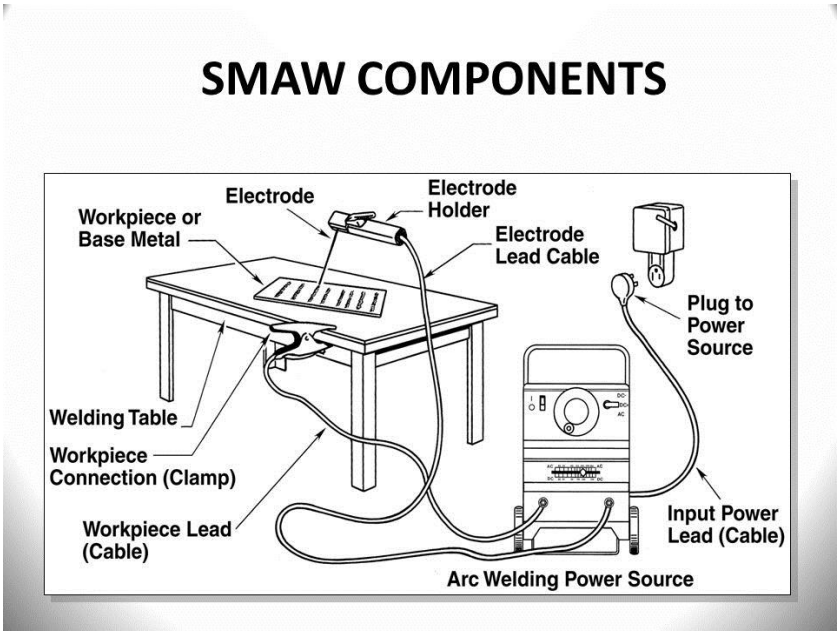

Other Information about Shielded Metal Arc Welding:

- Shielded metal arc welding equipment typically consists of a constant current welding power supply and an electrode, with an electrode holder, a 'ground' clamp, and welding cables (also known as welding leads) connecting the two.
- Often used to weld carbon steel, low and high alloy steel, stainless steel, cast iron, and ductile iron. While less popular for nonferrous materials, it can be used on nickel and copper and their alloys and, in rare cases, on aluminum.

3. GAS TUNGSTEN ARC WELDING (TIG)

https://en.wikipedia.org/wiki/Gas_tungsten_arc_welding
http://www.thefabricator.com/article/arcwelding/the-fundamentals-of-gas-tungsten-arc-welding--preparation-consumables-and-equipment-necessary-for-the-process

General:

- An arc welding process that uses a non-consumable tungsten electrode to produce the arc and a filler metal to produce the weld.
- TIG stands for Tungsten Inert Gas.
- The weld area is protected from atmospheric contamination by an inert shielding gas (argon or helium).
- Most commonly used to weld thin sections of stainless steel and non-ferrous metals such as aluminum, magnesium, and copper alloys.

- Manual gas tungsten arc welding is a relatively difficult welding method, due to the coordination required by the welder.
- Normally requires two hands, since most applications require that the welder manually feed a filler metal into the weld area with one hand while manipulating the welding torch in the other.
- Because it affords greater control over the weld area than other welding processes, TIG can produce high-quality welds when performed by skilled operators.
- Welding procedure variables control the welding process and the quality of the welds produced. Joint configuration is determined by the design of the weldment, the metallurgical analysis, and by the process and procedure required by the weldment.
- The adjustable variables control the shape of the weld by affecting things such as bead height, bead width, penetration, and weld integrity. The primary adjustable variables for GTAW are welding current, arc length, and travel speed.
- Secondary variables also aid in controlling the welding process, but it is more difficult to calculate the extent of effect. The secondary variables include work and travel angle and the distance the electrode extends beyond the end of the cup.

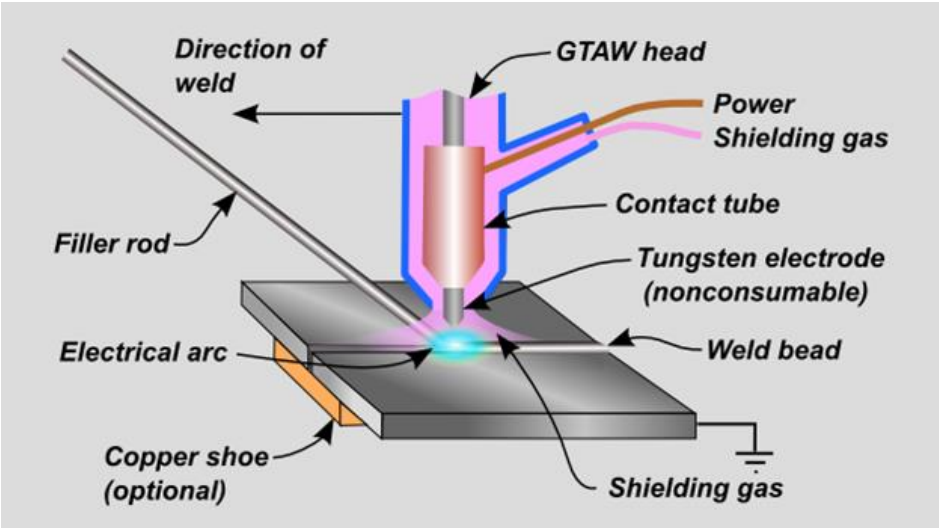

GTAW WELD DETAIL

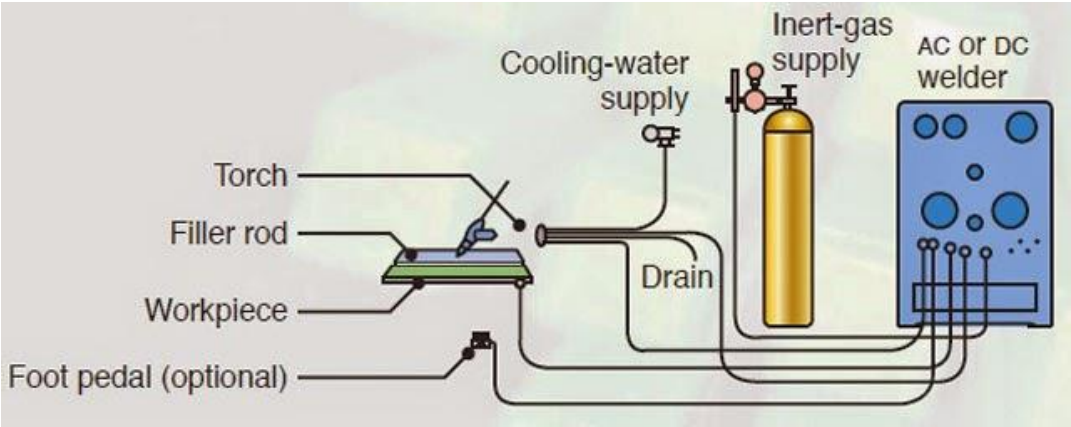

GTAW COMPONENTS

Other Information about Gas Tungsten Arc Welding:

- Electrode material is made from a tungsten alloy. Tungsten has one of the highest melting temperatures of any metal, about 6,170 degrees Fahrenheit (3,410 degrees Celsius).
- The size of an electrode to be used is determined by the welding current required. Larger electrodes permit higher currents to be used. Smaller diameter electrodes may be used for welding thinner materials or while welding out of position.
- Tungsten types include: pure tungsten, thoriated tungsten (for carbon and stainless steel), and zirconiated tungsten (for use with higher AC currents on nonferrous metals).

4. GAS METAL ARC WELDING (MIG)

http://www.weldguru.com/Mig.html
https://en.wikipedia.org/wiki/Gas_metal_arc_welding

General:

- A welding process in which an electric arc forms between a consumable wire electrode and the workpiece metal(s), which heats the workpiece metal(s), causing them to melt and join.
- A shielding gas feeds through the welding gun, which shields the process from contaminants in the air. MIG stands for Metal Inert Gas.
- Originally developed for welding aluminum and other non-ferrous materials in the 1940s, GMAW was soon applied to steels because it provided faster welding time compared to other welding processes. The cost of inert gas limited its use in steels until several years later, when the use of semi-inert gases such as carbon dioxide became common.
- To perform gas metal arc welding, the basic necessary equipment is a welding gun, a wire feed unit, a welding power supply, a welding electrode wire, and a shielding gas supply.

- There are four primary methods of metal transfer called globular, short-circuiting, spray, and pulsed-spray, each of which has distinct properties and corresponding advantages and limitations.

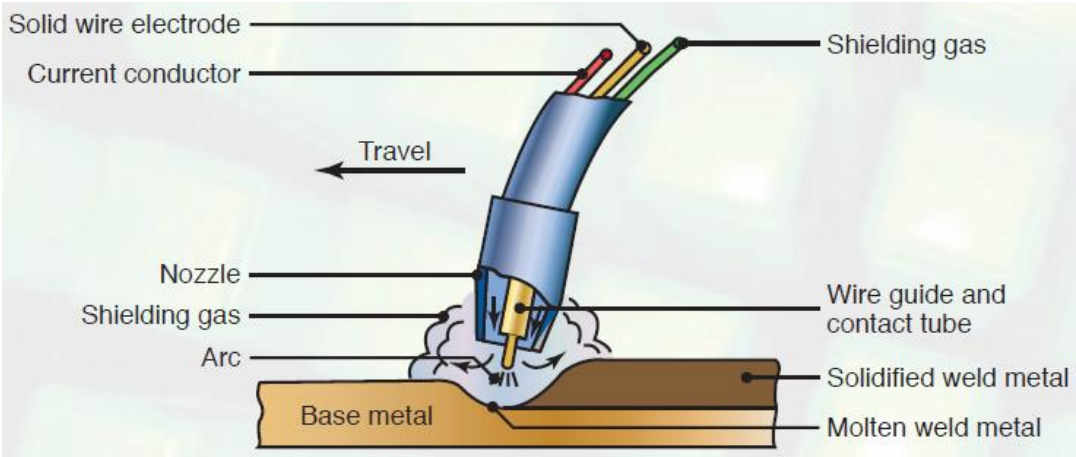

GMAW WELD DETAIL

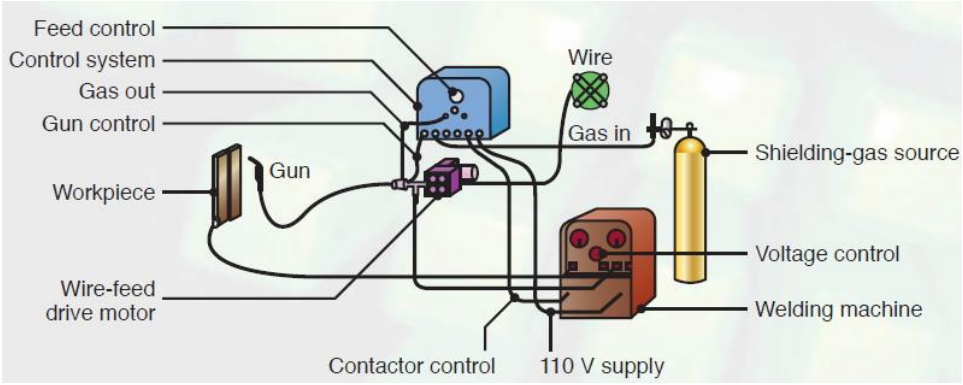

GMAW COMPONENTS

Advantages and Disadvantages of Gas Metal Arc Welding:

- The major advantage of gas metal-arc welding is that high quality welds can be produced much faster than with SMAW or TIG welding.
- Since a flux is not used, there is no chance for the entrapment of slag in the weld metal.
- The gas shield protects the arc so that there is very little loss of alloying elements as the metal transfers across the arc. Only minor weld spatter is produced, and it is easily removed.
- This process is versatile and can be used with a wide variety of metals and alloys, including aluminum, copper, magnesium, nickel, and many of their alloys, as well as iron and most of its

alloys. The process can be operated in several ways, including semi- and fully automatic. MIG welding is widely used by many industries for welding a broad variety of materials, parts, and structures.

- The major disadvantage of this process is that it cannot be used in the vertical or overhead welding positions due to the high heat input and the fluidity of the weld puddle.
- The equipment is complex compared to equipment used for the shielded metal-arc welding process.

5. FLUX-CORED ARC WELDING (MIG)

https://en.wikipedia.org/wiki/Flux-cored_arc_welding
http://www.lincolnelectric.com/en-ca/support/process-and-theory/Pages/mig-vs-flux-cored-detail.aspx
http://www.gowelding.org/welding/fcaw-flux-cored-arc-welding/

General:

- Flux-cored arc welding is a very similar process to that of Gas metal arc welding but differs primarily in the wire electrode consumable.
- FCAW requires a continuously-fed consumable tubular electrode containing a flux and a constant-voltage or, less commonly, a constant-current welding power supply. An externally supplied shielding gas is sometimes used, but often the flux itself is relied upon to generate the necessary protection from the atmosphere, producing both gaseous protection and liquid slag protecting the weld.
- One type of FCAW requires no shielding gas. This is made possible by the flux core in the tubular consumable electrode. Another type of FCAW uses a shielding gas that must be supplied by an external supply. This is known informally as "dual shield" welding. This type of FCAW was developed primarily for welding structural steels.
- The fluxe-cored electrodes are optimal for outdoor procedures since the flux is built into the wire for positive shielding even in windy conditions. An external shielding gas and additional equipment are not needed, so setting up is simpler, faster and easier. The flux-cored process is most suited for applications with thicker materials as it is less prone to cold lapping.
- It is not recommended for very thin materials (less than 20 gauge). This process creates spatter and slag that may need to be cleaned for painting or finishing.

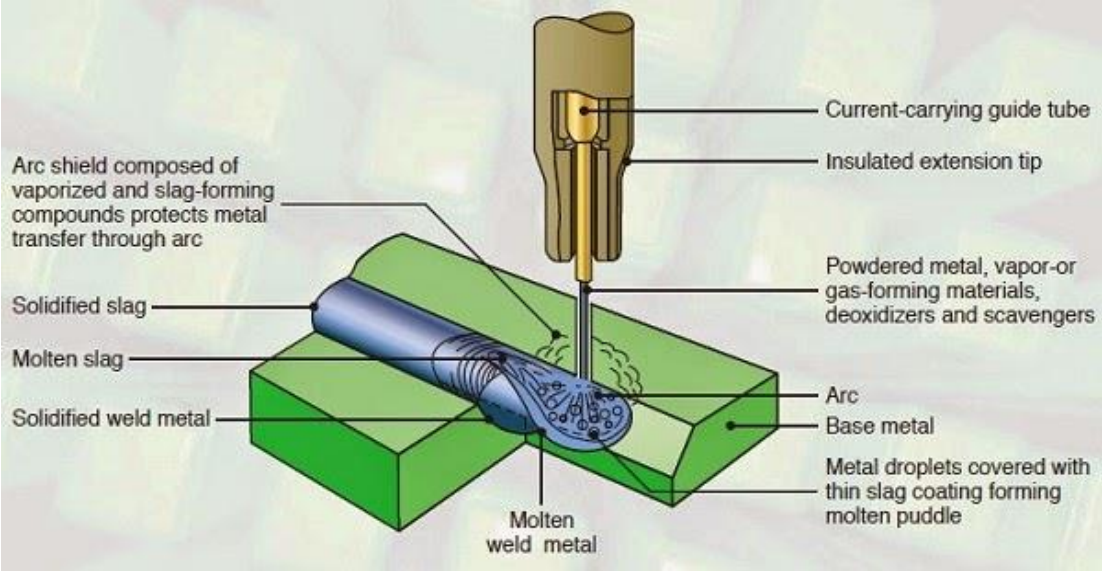

FLUX-CORED ARC WELDING DETAIL

6. SUBMERGED ARC WELDING

https://en.wikipedia.org/wiki/Submerged_arc_welding
http://www.weldguru.com/saw.html
http://www.twi-global.com/technical-knowledge/faqs/process-faqs/faq-what-is-submerged-arc-welding/

General:

- Submerged arc welding is a process in which the joining of metals is produced by heating with an arc or arcs between a bare metal electrode or electrodes and the work. The arc is shielded by a blanket of granular fusible material on the work.
- The submerged arc process is widely used in heavy steel plate fabrication work. This includes the welding of structural shapes, the longitudinal seam of larger diameter pipe, the manufacture of machine components for all types of heavy industry, and the manufacture of vessels and tanks for pressure and storage use.
- A major limitation is its limitation of welding positions. The other limitation is that it is primarily used only to weld mild and low-alloy high-strength steels.
- Normally operated in the automatic or mechanized mode, however, semi-automatic (hand-held) SAW guns with pressurized or gravity flux feed delivery are available. The process is normally limited to the flat or horizontal-fillet welding positions (although horizontal groove position welds have been done with a special arrangement to support the flux).

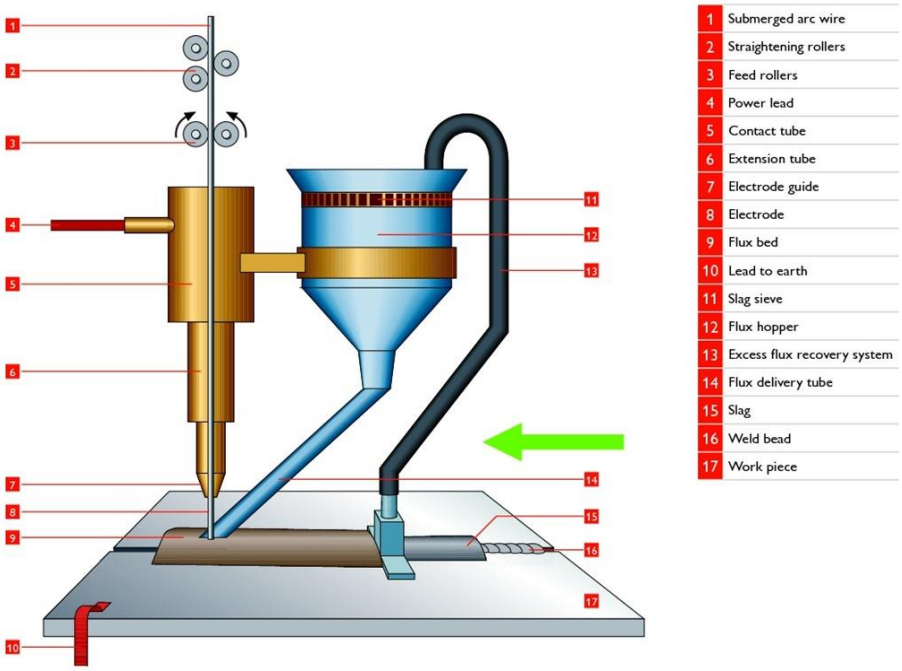

SUBMERGED ARC WELDING DETAIL

7. ELECTROSLAG WELDING

https://en.wikipedia.org/wiki/Electroslag_welding
http://me-mechanicalengineering.com/electroslag-welding-esw/

General:

- A highly productive, single pass welding process for thick (greater than 25 mm up to about 300 mm) materials in a vertical or close to vertical position.
- An electric arc is initially struck by wire that is fed into the desired weld location and then flux is added. Additional flux is added until the molten slag, reaching the tip of the electrode, extinguishes the arc. The wire is then continually fed through a consumable guide tube into the surfaces of the metal workpieces and the filler metal are then melted using the electrical resistance of the molten slag to cause coalescence. The wire and tube then move up along the workpiece while a copper retaining shoe is used to keep the weld between the plates that are being welded.
- Used mainly to join low carbon steel plates and/or sections that are very thick. It can also be used on structural steel if certain precautions are observed.
- Benefits of the process include its high metal deposition rates—it can lay metal at a rate between 15 and 20 kg per hour (35 and 45 lb/h) per electrode—and its ability to weld thick

materials. Many welding processes require more than one pass for welding thick workpieces, but often a single pass is sufficient for electroslag welding.

- The process is very efficient, since joint preparation and materials handling are minimized while filler metal utilization is high. The process is safe and clean, with no arc flash and low weld splatter or distortion.
- Electroslag welding easily lends itself to mechanization, thus reducing the requirement for skilled manual welders.

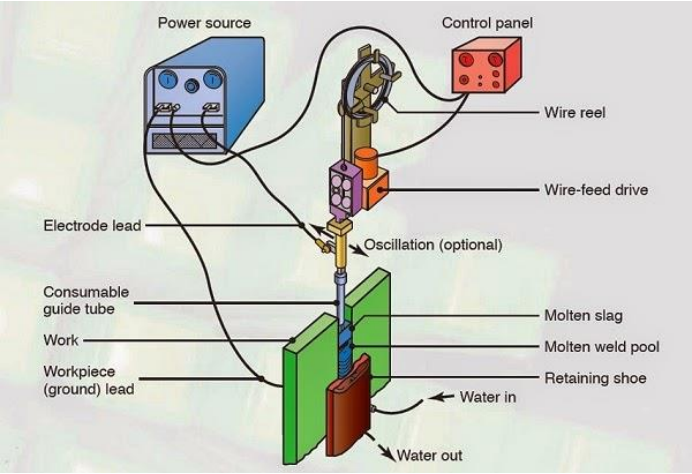

ELECTROSLAG WELDING DETAIL

8. OXY-FUEL CUTTING/WELDING/HEATING

8.1 CUTTING

https://en.wikipedia.org/wiki/Oxy-fuel_welding_and_cutting

General:

- A process the uses fuel gases and oxygen to cut metal/
- Pure oxygen, instead of air, is used to increase the flame temperature to allow localized melting of the workpiece material (e.g. steel) in a room environment.
- A common propane/air flame burns at about 2,250 K (1,980 °C; 3,590 °F), a propane/oxygen flame burns at about 2,526 K (2,253 °C; 4,087 °F), an oxyhydrogen flame burns at 2,800 °C (5,070 °F), and an acetylene/oxygen flame burns at about 3,773 K (3,500 °C; 6,332 °F).
- Oxy-fuel is one of the oldest welding processes, besides forge welding. In recent decades it has been obsolesced in most all industrial uses due to various arc welding methods offering more consistent mechanical weld properties and faster application.

- A torch is used to heat metal to its kindling temperature. A stream of oxygen is then trained on the metal, burning it into a metal oxide that flows out of the kerf as slag.
- Types of fuel include: acetylene, gasoline, hydrogen, MPS or MAPP gas, propylene or fuel gas, butane, propane, and butane/propane mixtures.
- Oxygen is not the fuel. It is what chemically combines with the fuel to produce the heat for welding. This is called 'oxidation', but the more specific and more commonly used term in this context is 'combustion.'

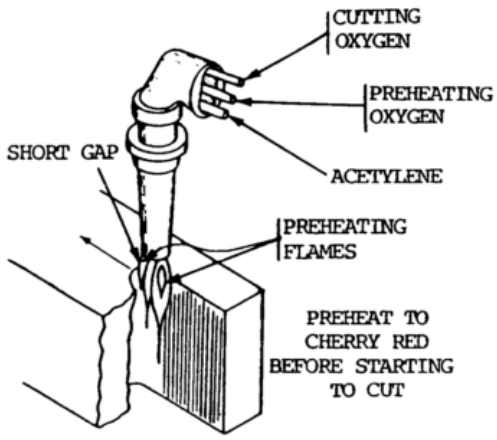

Figure 12-6. Process diagram of oxygen cutting.

8.2 WELDING

General:

- In oxy-fuel welding, a welding torch is used to weld metals. Welding metal results when two pieces are heated to a temperature that produces a shared pool of molten metal. The molten pool is generally supplied with additional metal called filler. Filler material depends upon the metals to be welded.
- The flame is applied to the base metal and held until a small puddle of molten metal is formed. The puddle is moved along the path where the weld bead is desired. Usually, more metal is added to the puddle as it is moved along by dipping metal from a welding rod or filler rod into the molten metal puddle. The metal puddle will travel towards where the metal is the hottest. This is accomplished through torch manipulation by the welder.
- The amount of heat applied to the metal is a function of the welding tip size, the speed of travel, and the welding position. The flame size is determined by the welding tip size. The proper tip size is determined by the metal thickness and the joint design.
- The welder must add the filler rod to the molten puddle. The welder must also keep the filler metal in the hot outer flame zone when not adding it to the puddle to protect filler metal from oxidation.

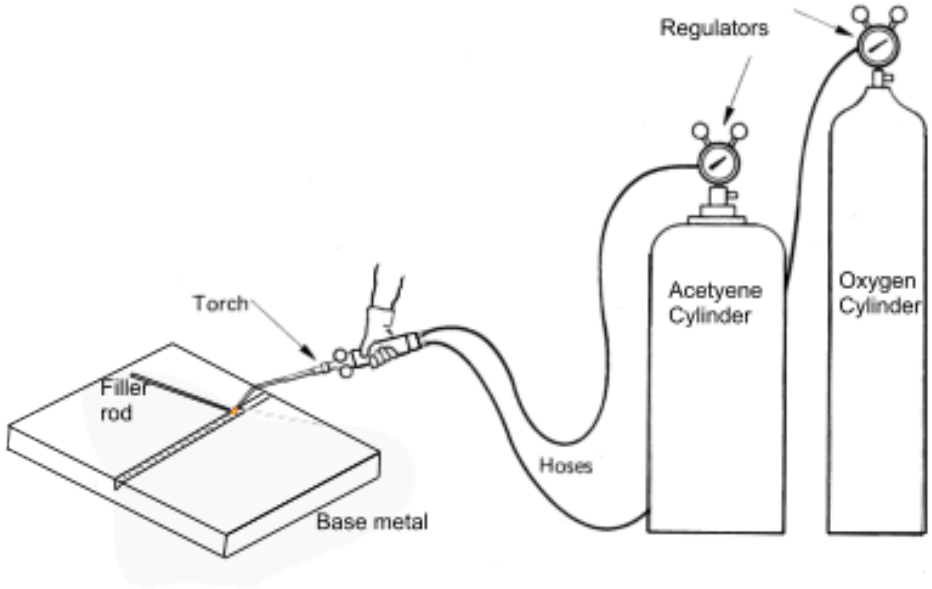

OXY-FUEL WELDING DETAIL

8.3 HEATING

General:

- The oxy-fuel setup can also be used to create a steady flame for uses such as: the heating for metal for bending or shaping, removal of grease and grime from workpieces, weed burning, de-icing, jewelry making, forging, sculpting and more.
- Special tips called sometimes called rosebuds are used to create a superheated flame in various sizes and shapes depending on the application.
- Tips and torch setups are tailored to the gas type and should not be interchanged.

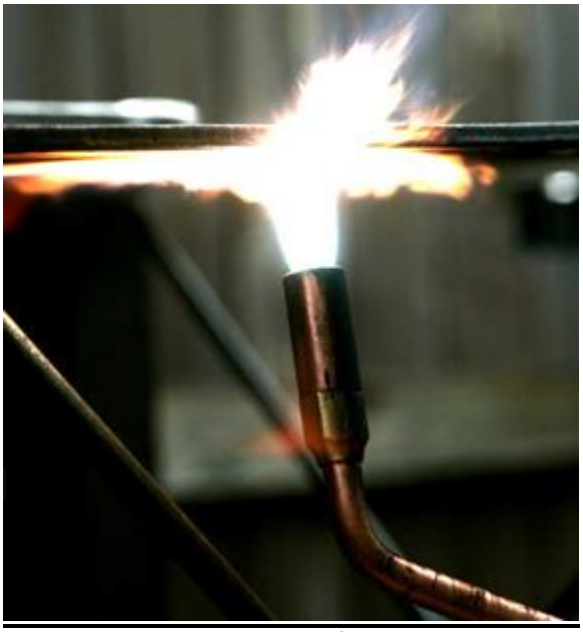

OXY-FUEL HEATING w/ROSEBUD TIP

9. PLASMA CUTTING/WELDING

9.1 PLASMA CUTTING

http://www.lincolnelectric.com/en-us/equipment/plasma-cutters/process-and-theory/Pages/how-a-plasma-cutter-works.aspx
https://en.wikipedia.org/wiki/Plasma_cutting

General:

- A process that cuts through electrically conductive materials by means of an accelerated jet of hot plasma.
- Typical materials cut with a plasma torch include steel, aluminum, brass and copper, although other conductive metals may be cut as well.
- Plasma cutting is often used in fabrication shops, automotive repair and restoration, industrial construction, and salvage and scrapping operations. Due to the high speed and precision cuts combined with low cost, plasma cutting sees widespread use from large-scale industrial CNC applications down to small hobbyist shops.

Services/Products under Plasma Cutting:

Service/Product	Description	Benefits

Plasma Cutting	○ Process involves creating an electrical channel of superheated, electrically ionized gas i.e. plasma from the plasma cutter itself, through the work piece to be cut, thus forming a completed electric circuit back to the plasma cutter via a grounding clamp. ○ Plasma cutting is an effective means of cutting thin and thick materials alike. Hand-held torches can usually cut up to 38mm thick steel plate, and stronger computer-controlled torches can cut steel up to 150 mm thick. ○ Since plasma cutters produce a hot and localized "cone" to cut with, they are extremely useful for cutting sheet metal in curved or angled shapes.	○ Plasma cutting is the fastest cutting process on carbon steel, aluminum, or stainless steel. ○ Plasma cutting can be combined with waterjet or oxy fuel on the same part. ○ Plasma cutting can be used for precision cutting on gauge material up to 6” thick stainless. ○ Can be rigged for both manual or mechanized cutting procedures.

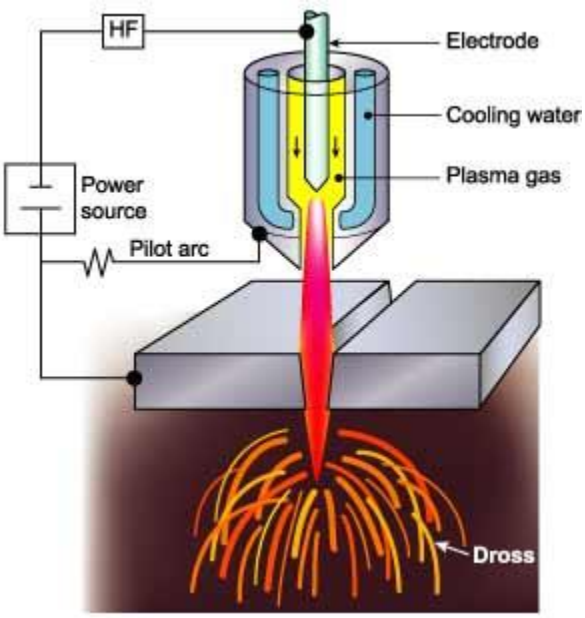

PLASMA CUTTING DETAIL

9.2 PLASMA WELDING

https://en.wikipedia.org/wiki/Plasma_arc_welding
http://www.weldguru.com/plasma-welding.html#advantages

General:

- Plasma arc welding is an arc welding process wherein coalescence is produced by the heat obtained from a constricted arc setup between a tungsten/alloy tungsten electrode and the water-cooled (constricting) nozzle (non-transferred arc) or between a tungsten/alloy tungsten electrode and the job (transferred arc). The process employs two inert gases, one forms the arc plasma and the second shields the arc plasma. Filler metal may or may not be added.
- Major uses of plasma arc are its application for the manufacture of tubing (stainless steel, titanium alloy). Higher production rates based on faster travel speeds result from plasma over gas tungsten arc welding. Tubing made of stainless steel, titanium, and other metals is being produced with the plasma process at higher production rates than previously with gas tungsten arc welding.
- The torch is more delicate and complex than a gas tungsten arc torch. Even the lowest rated torches must be water cooled.
- The tip of the tungsten and the alignment of the orifice in the nozzle is extremely important and must be maintained within very close limits. The current level of the torch cannot be exceeded without damaging the tip.

Services/Products under Plasma Welding:

Service/Product	Description	Benefits
Plasma Welding	○ An arc welding process similar to gas tungsten arc welding. ○ The electric arc is formed between an electrode and the workpiece. ○ The key difference from GTAW is that in PAW, by positioning the electrode within the body of the torch, the plasma arc can be separated from the shielding gas envelope. ○ The plasma is forced through a fine-bore copper nozzle which constricts the arc and the plasma	○ More freedom during manual welds. The torch-to-work distance from the plasma arc is less critical than for gas tungsten arc welding. ○ High temperature and high heat concentration of the plasma allow for the keyhole effect, which provides complete penetration single pass welding of many joints. ○ Faster travel speeds. The higher heat concentration and

	exits the orifice at high velocities and a temperature approaching 28,000 °C (50,000 °F) or higher.	the plasma jet allow for higher travel speeds.

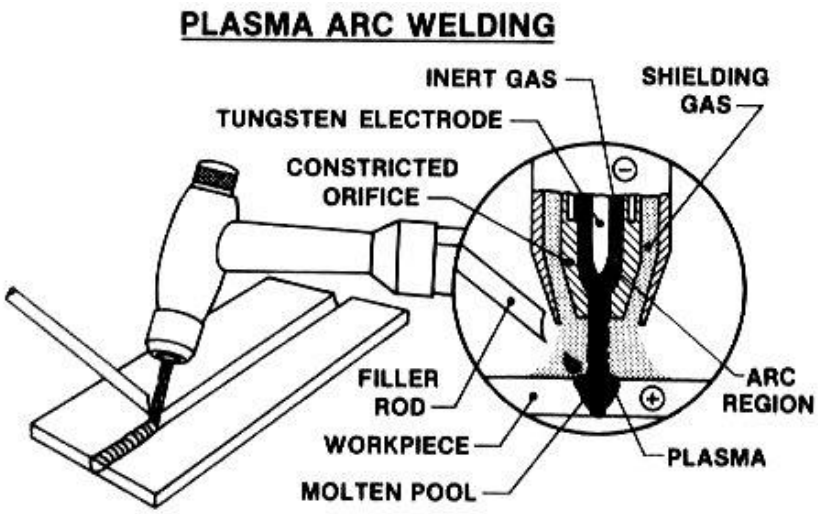

10. GOUGING

http://www.twi-global.com/technical-knowledge/job-knowledge/air-carbon-arc-gouging-012/

General:

- A technique that uses a separate air jet to eject molten metal from a groove created by current and a copper coated electrode.
- Gouging is commenced by striking the electrode tip on to the workpiece surface to initiate the arc. Molten metal directly under the electrode tip (arc) is immediately blown away by the air stream. The metal becomes molten and a high velocity air jet streams down the electrode to blow it away, thus leaving a clean groove.
- Typical applications include back gouging, removal of surface and internal defects, removal of excess weld metal and preparation of bevel edges for welding.

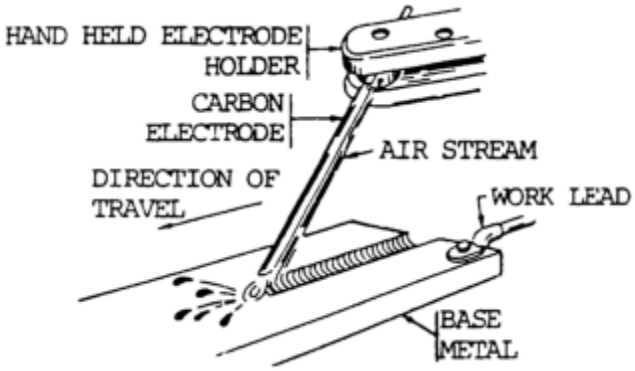

GOUGING DETAIL

11. SOLDERING

https://en.wikipedia.org/wiki/Soldering

General:

- A process in which two or more items (usually metal) are joined together by melting and putting a filler metal (solder) into the joint, the filler metal having a lower melting point than the adjoining metal.
- Soldering differs from welding in that soldering does not involve melting the work pieces.
- Soldering provides reasonably permanent but reversible connections between copper pipes in plumbing systems as well as joints in sheet metal objects such as food cans, roof flashing, rain gutters and automobile radiators.
- Jewelry components, machine tools and some refrigeration and plumbing components are often assembled and repaired by the higher temperature silver soldering process. Small mechanical parts are often soldered or brazed as well. Soldering is also used to join lead came and copper foil in stained glass work.
- Soldering filler materials are available in many different alloys for differing applications. In electronics assembly, the eutectic alloy of 63% tin and 37% lead (or 60/40, which is almost identical in melting point) has been the alloy of choice. Other alloys are used for plumbing, mechanical assembly, and other applications. Some examples of soft-solder are tin-lead for general purposes, tin-zinc for joining aluminum, lead-silver for strength at higher than room temperature, cadmium-silver for strength at high temperatures, zinc-aluminum for aluminum and corrosion resistance, and tin-silver and tin-bismuth for electronics.

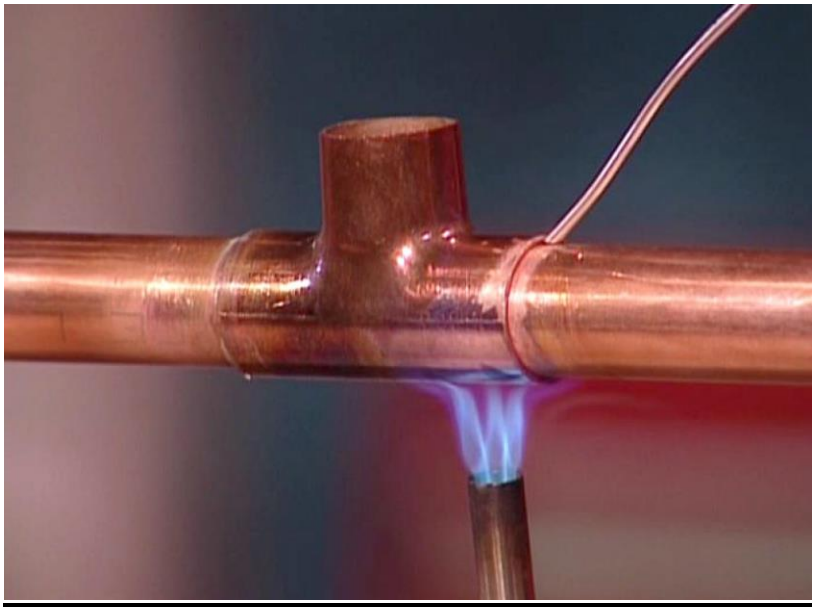

SOLDERING A COPPER PIPE